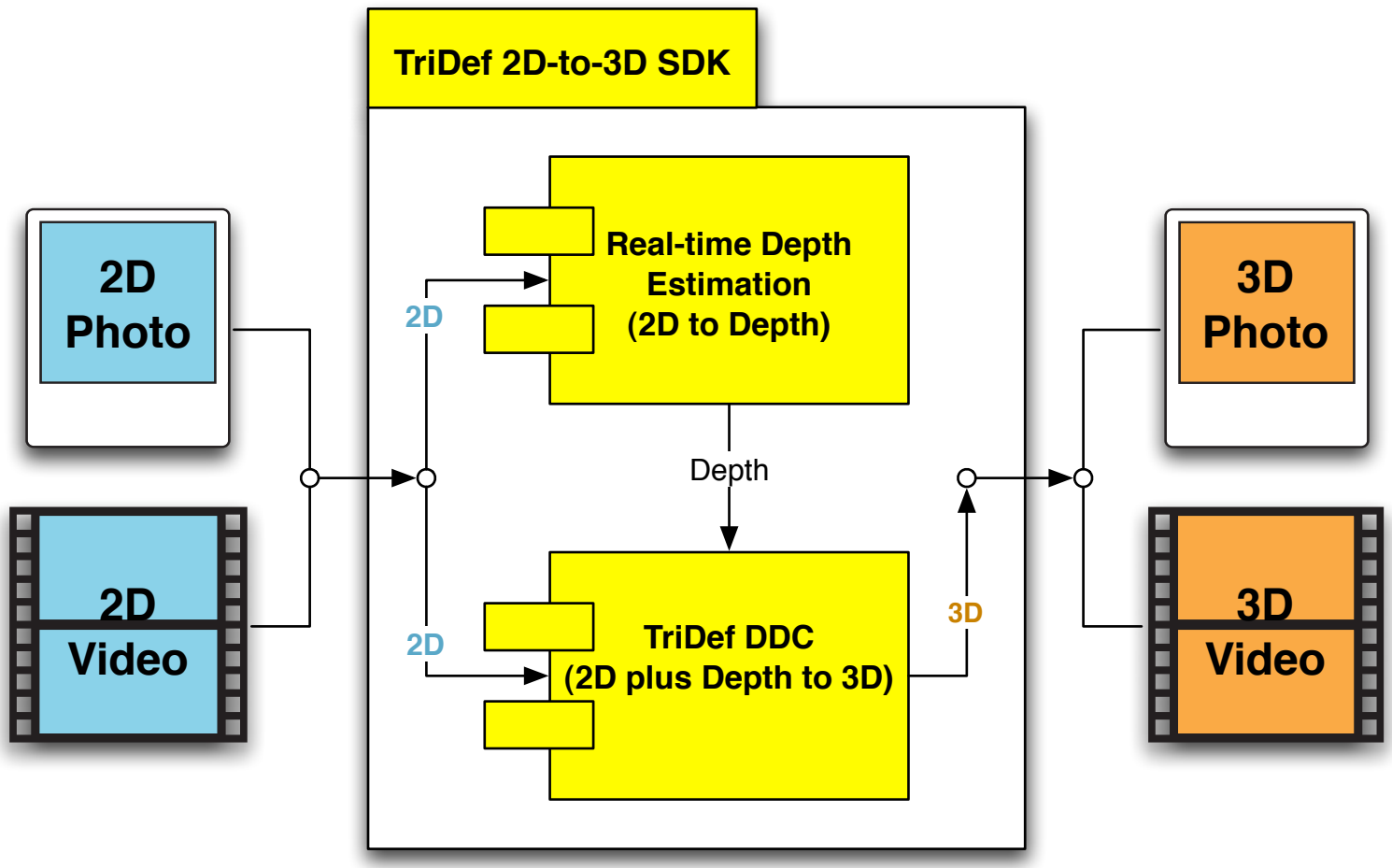

DDD Group Plc.
Copyright 2001-2005
All Rights Reserved.